WHITE PAPER:
EA ELEKTRO-AUTOMATIK'S FUTURE-PROOF BATTERY CYCLER AND TEST SYSTEM ADAPTS TO EVOLVING EV BATTERY TECHNOLOGIES

WHITE PAPER:
EA ELEKTRO-AUTOMATIK'S FUTURE-PROOF BATTERY CYCLER AND TEST SYSTEM ADAPTS TO EVOLVING EV BATTERY TECHNOLOGIES

As demand for EVs grows stronger, new battery technologies will be required to supplement and eventually replace classic Li-ion battery systems. The advanced EA-BCTS-10300 battery cycling and test system from EA Elektro-Automatik provides the tools to economically adapt to new EV battery testing paradigms.

INTRODUCTION

A recent study by the International Energy Agency[1] projects that electric vehicles will account for 30% of global vehicle sales by 2030. The explosive growth in EVs forecasted by the IEA (from 10% in 2022) is being driven in part by global legislative mandates addressing environmental concerns, such as setting 2035 as the target for dramatic reductions in the production of internal combustion engine vehicles or ICEVs, in over 60 countries.[2] The broader adoption of EVs is also driven by environmentally conscious consumers worldwide.[3]

Although typically powered by Lithium-ion battery technology, newer and more efficient battery technologies are needed to support the proliferation of EVs. As a result, automotive test systems must have the versatility to support these emerging technologies as well as the current state of battery technology.

This white paper describes the features and functions of EA Elektro-Automatik's truly future-proof battery cycling and test system, the EA-BCTS 10300, which has the ability to adapt to the newest battery innovations being developed for EVs.

CHALLENGE: EVOLVING EV BATTERY TECHNOLOGY

The single most important factor in the sustained growth of the EV market is the development of higher power, higher efficiency energy sources to drive the electric vehicle drive train. While there is a great deal of work being done in hydrogen fuel cell stacks, the predominant EV technology today is based on Li-ion rechargeable batteries.

During the past several years, each new generation of EVs has worked to address consumers' primary concerns about vehicle range along with the related issue of recharging time. This has set the stage for the continuous development of advances in Li-Ion battery technology and also in alternative technologies like solid-state, zinc-air, graphene batteries and many others.[4]

But regardless of the technology, operating voltage level, charging rate, rating and use case, these battery systems must undergo rigorous testing while under development and in the battery manufacturing process—as well as during the EV manufacturers' production testing.

SOLUTION: VERSATILE EA-BCTS 10300 BATTERY CYCLING AND TEST SYSTEM

The system described here is built on the foundation of EA's advanced auto-ranging, bi-directional, energy-regenerative programmable power supplies and loads. The EA-BCTS 10300 battery cycling and testing system integrates EA's:

- Scalable and versatile programmable power devices
- Battery test software (EA-BTS)
- 24" touch panel display and user interface
- Power Control and Measurement Module (PCMM)

The result is a cycling and test system that is light on its feet by being easily adaptable to whatever changes are required in the fast-changing battery technology environment – unlike other systems that require replacements or upgrades as battery technology changes.

EA-BCTS 10300 VS. TYPICAL BATTERY CYCLING AND TEST SYSTEM

Figure 1 shows a typical battery cycling and test system in use today. The system utilizes a rack of programmable power supplies and programmable loads ("Cycler") and another rack with an industrial PC, test equipment and communications systems. The battery packs in this system are cycled while operating at a controlled temperature prescribed by the specific test protocol. It would typically be locked into a battery pack configuration and power rating. Depending on the type of power supplied, a cycling test may require interruption to allow the instrument to change range as the battery pack voltage ramps up or down.

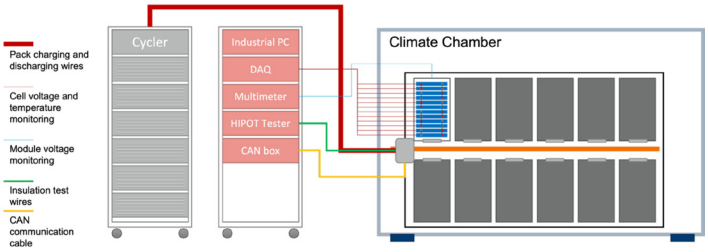

Figure 1. Typical multi-rack battery pack testing and cycling system.

In comparison, the EA-BCTS 10300 system shown in Figure 2 integrates all the testing and communications systems into a single enclosure. The EA-BCTS 10300 system is rated at 30-300kW and is expandable to a maximum of 3.84MW. Unlike the typical test system in Figure 1, the true autoranging capability of the EA-BCTS 10300 system's programmable power source can deliver the required power over a wide range of voltage conditions.

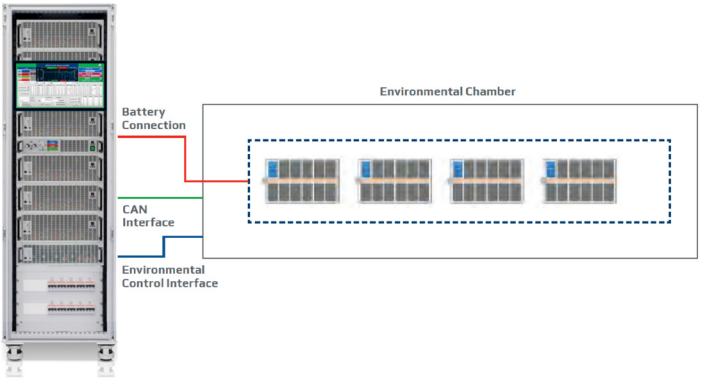

Figure 2. The fully integrated EA-BCTS 10300 system is easily reprogrammed to accommodate new testing requirements.

COMPONENTS OF THE EA BCTS 10300 SYSTEM

EA Bi-Directional Power

EA's autoranging, bidirectional, regenerative programmable DC power supplies continue to lead the industry in flexibility, power density, electrical efficiency and performance. The latest-generation systems utilize SiC power switches that, thanks to their higher frequencies, have enabled increased power density and efficiency of up to 96.5%. The bi-directional units essentially "borrow" the utility power by returning more than 90% of the utility power used in the charge/discharge cycle (Figure 3).

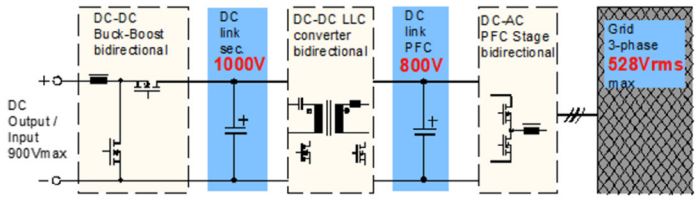

Figure 3. EA's bi-directional power conversion system can return to the grid more than 90% of DUT power.

The EA-BCTS 10300 system utilizes EA's PUB bi-directional industrial series. These units are designed to be configured in parallel to deliver the needed power output and are controlled by EA Power Control and Measurement Module (PCMM). They are offered in 19" rack mount chassis with heights from 2U to 6U with maximum power output levels ranging from 3.0 kW to 60 kW, respectively. PUBs are up to 96.5% efficient and boast a <500µs current slew rate from 10-90% full scale.

The autoranging capability of these units is critical to the flexibility of the entire system. Compared with "conventional" power supplies that provide maximum power only at the rated voltage and current, EA offers true autoranging capability to customers, allowing for maximum power to be delivered over a wide range of voltage conditions. For example, a conventional battery cycling and test system configured for 400 V battery packs would require the replacement of the power supplies that are reconfigured for 800 V batteries. But EA's autoranging capability would deliver the maximum power output without any reconfiguration.

EA Power Control and Measurement Module (PCMM)

The operational interface between the battery packs being cycled and tested (DUT) and the programmable di-directional power supplies is the PCMM. The PCMM is housed in a 6U 19" rack mount chassis. As detailed in Figure 4, the PCMM includes an industrial PC running EA's battery test software, plus available cell voltage and temperature data acquisition, module voltage and a hipot tester.

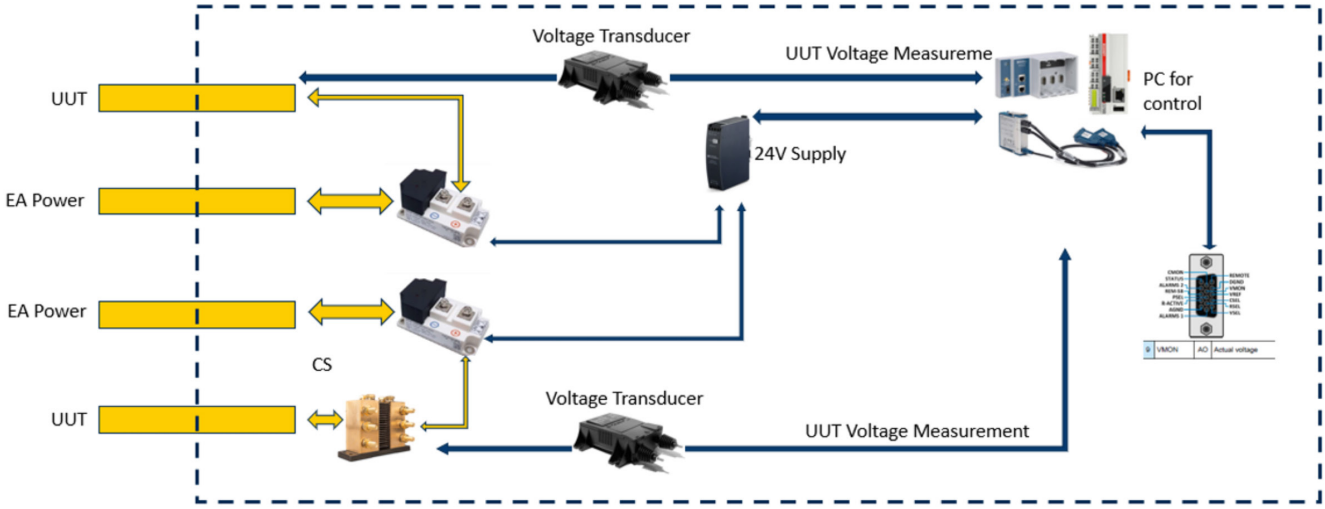

Figure 4. The EA Elektro-Automatik PCMM provides the BCTS 10300 control and measurement functions.

EA Battery Test Software and Interactive Display Module

The EA Elektro-Automatik Battery Test Software offers a full range of pre-programmed test protocols and simple means for user-defined tests, such as capacity, four seasons, pulse and imported battery cycling. Built-in drive cycle simulations include FUDS, SFUDS, GSFUDS, DST and ECE-ICL. An innovative "widget" style display (Figure 5) is fully customizable.

Figure 5. An example of the BCTS 10300 interactive and fully customizable display.

COMPREHENSIVE APPROACH TO BATTERY CYCLING AND TESTING

The EA-BCTS 10300 provides a complete solution for battery cycling and testing for EV batteries. In addition to battery cycling, tests include drive cycle simulations and insulation resistance. The system can control an environmental chamber and interface to the battery management system through the CAN bus interface. The drag-and-drop system software enables quick and easy test setup and execution. All this performance includes:

- High voltage up to 1500 VDC with optional 2000 VDC
- High power up to 3.84 MW
- High power density with 300 kW/rack capacity in only 6.5 sq ft of rack space
- High speed with instrument slew rates under 500 µs and continuous, true autoranging
- High efficiency with up to 96.5% return of absorbed energy to the AC grid
- High integration with a complete package of power and control, yet modular allowing easy system modification and expansion

CONCLUSION

Advances in EV battery technologies are being developed now — and others in the near future. New batteries utilize a variety of compositions and add to the challenges of testing and cycling. The features and flexibility of the EA-BCTS 10300 allow the system to adapt to new battery testing protocols quickly. And thanks to its advanced features and functionality, the system is positioned to deliver exceptional value while keeping pace with new battery technologies.

REFERENCES

1. International Energy Agency, Global EV Outlook 2022 Executive Summary
2. EETimes, 08.12.2022, Many Countries Eye 2035 for Serious EV Conversion
3. Jerry, 04.27.2022, What's the Biggest Reason Why People Want EVs?
4. Green Cars, June 2023, The Future of EV Batteries

SERVICE FOR YOU WORLDWIDE.

At the headquarter in Germany in the industrial centre of North Rhine Westphalia more than 300 qualified associates, in a facility of 21000 m², research, develop and manufacture high-tech equipment for laboratory power supply, high power mains adaptors and electronic loads with or without power feedback. The sales network includes branches in China and USA, sales office in Spain and an extensive partner network.

www.elektroautomatik.com